Honeywell

Touchpoint Pro
Input/Output Modules

Specifications

Common Specifications

Common Specifications	
Dimensions	35.0 mm x 99.5 mm x 114.5 mm (W x H x D)
Installation	5, 7, 9 or 10-way Communication / Power Rail
Maximum Wire Size	2.5 mm^2
IP Rating	IP20
EMC	EN 50270
Power Supply	18-32 Vdc (24 Vdc nominal)
DIN Rail Compatibility	TS-35 / 15
Casing Material	Polyamide PA 6.6 V0 (UL94)
Operating Temperature Range	-40°C to 65°C
Storage Conditions	-40°C to 65°C
Operating Humidity Range	10 to 90% RH (non-condensing)
Weight	210 g
Environmental Protection Class	Pollution Degree 2 (indoor sheltered)

Analogue Input Module mA

Analogue Input Module mA	
Description	4-channel 4-20 mA Analogue Input Module with 2 or 3 wire interface to detector
Sensor Configuration	4 x 2-wire or 3-wire (current sourced from detector)
Signal Measurement Range	0-25 mA
Supply Voltage (Vs)	24 Vdc (18-32 Vdc)
Field Device Supply Voltage	Supply Voltage (Vs) – 0.7 V
Single Channel Field Device Supply Current	Maximum 1 A
Total Field Device Supply Current	Total Maximum current : 2 A at 65 °C ambient Total Maximum current : 4 A at 55 °C ambient
Power Consumption	0.8 W (Excluding sensor supply)
Power Dissipation	Maximum 3.7 W, at 4 A total field device load Maximum 2.1 W, at 2 A total field device load
Sense Resistance	101 Ω
Connector Coding	Analogue Input Module connectors (TB1-TB4) are coded with coding keys to avoid mis-wiring
DIN Rail connector (Module Supply and Communication)	Maximum Current: 4.04 A (18-32 Vdc)

Honeywell

Touchpoint Pro
Input/Output Modules

Specifications continued

Terminal Identification	Label	Channel	Field Device
1	+V	Input 1	+24 Vdc
2	SIG		4-20 mA signal
3	-V		0 Vdc
4	+V	Input 2	+24 Vdc
5	SIG		4-20 mA signal
6	-V		0 Vdc
7	+V	Input 3	+24 Vdc
8	SIG		4-20 mA signal
9	-V		0 Vdc
10	+V	Input 4	+24 Vdc
11	SIG		4-20 mA signal
12	-V		0 Vdc

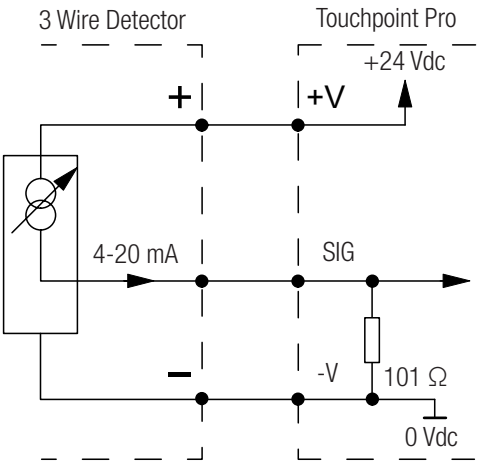

Three wire device

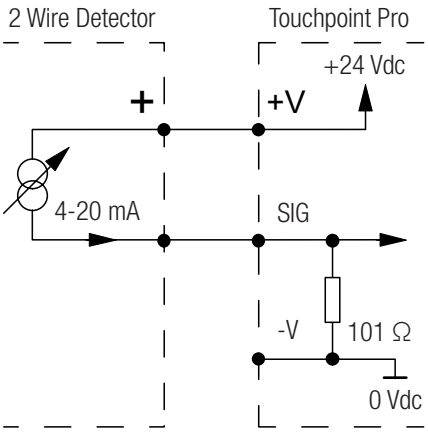

Two wire loop powered device

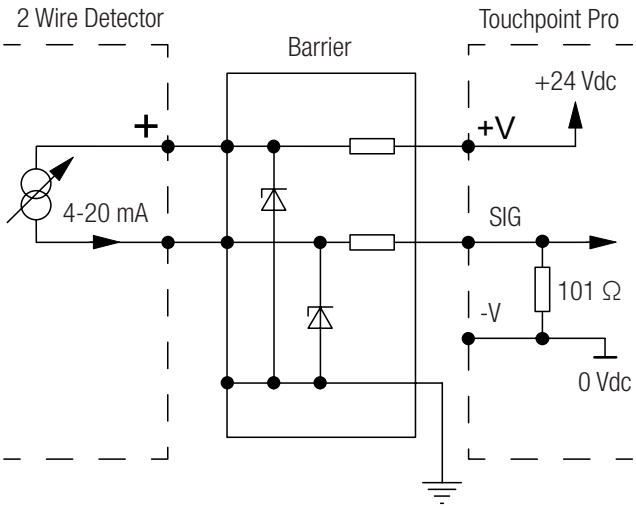

Two wire device with a barrier

Honeywell

Touchpoint Pro
Input/Output Modules

Specifications continued

Analogue Output Module 4-20 mA

Analogue Output Module mA	
Description	4-channel 4-20 mA Analogue Output Module with 2 or 3 wire interface to detector
Electrical Connection	4 x 2-wire or 3-wire (sink or source mode from detector)
Signal Output Range	0-22 mA
Loop Supply Voltage (Vs)	18 – 32 VDC
Power Consumption	Maximum 4.2 W
Power Dissipation	Maximum 4.2 W
Loop Resistance	0 – 500 Ohm
Connector Coding	Analogue Output Module connectors (TB1-TB4) are coded with coding keys to avoid incorrect wiring
DIN Rail connector (Module Supply and Communication)	Maximum Current: 160 mA (18-32 Vdc)

Terminal Identification	Label	Channel
1	+VI	Output 1
2	-mA	
3	+mA	
4	+VO	Output 2
5	-mA	
6	+mA	
7	-VI	Output 3
8	-mA	
9	+mA	
10	-VO	Output 4
11	-mA	
12	+mA	

AOM in Source Mode

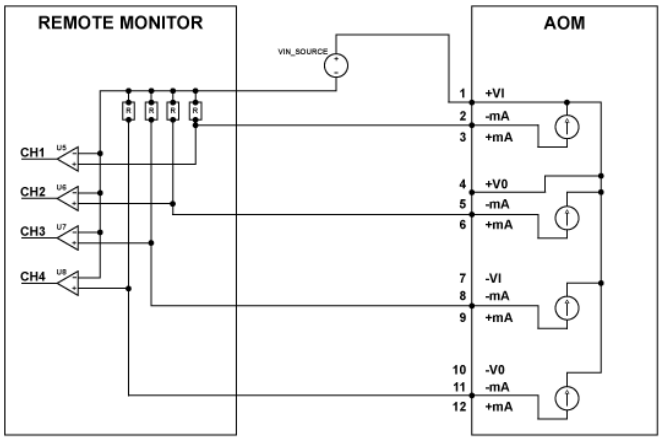

R = 0 – 500 Ohm

AOM in Sink Mode

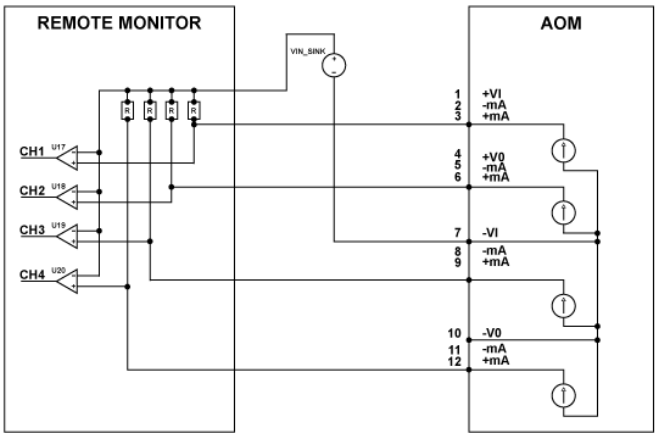

R = 0 – 500 Ohm

Honeywell

Touchpoint Pro
Input/Output Modules

Specifications continued

Multiple AOMs in Source Mode

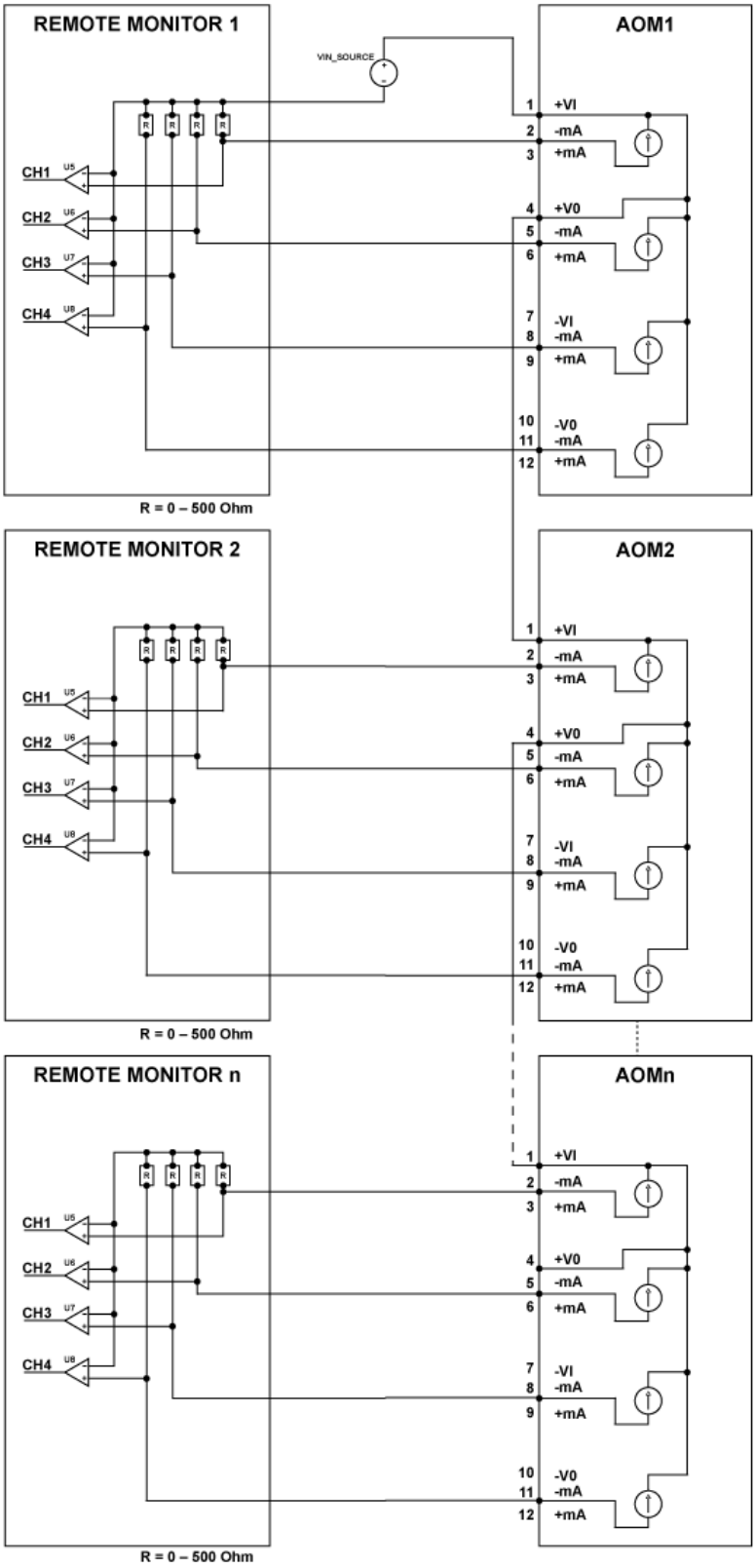

Honeywell

Touchpoint Pro
Input/Output Modules

Specifications continued

Multiple AOMs in Sink Mode

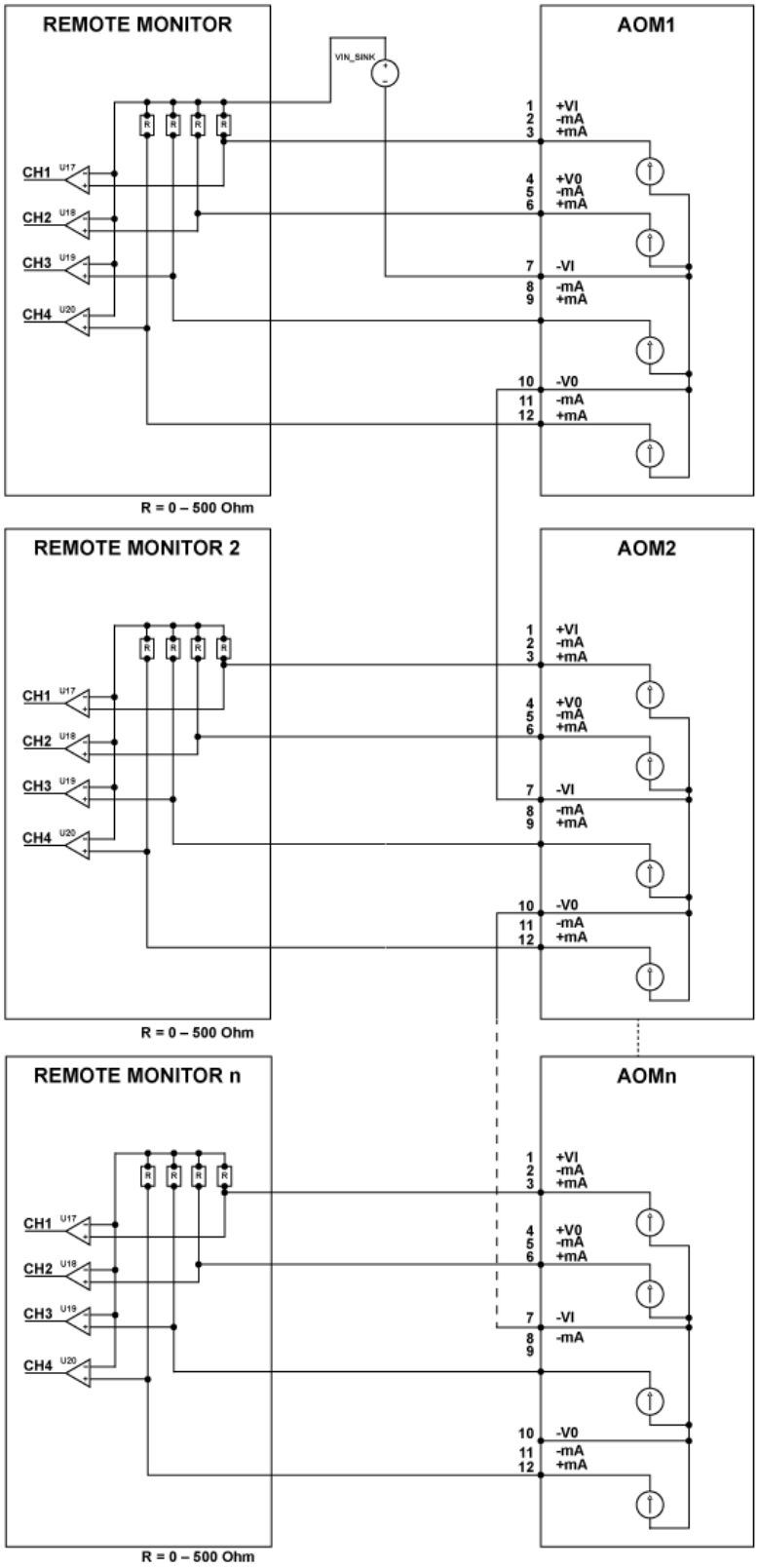

Touchpoint Pro
Input/Output Modules

Specifications continued

Analogue Input Module mV

Analogue Input Module mV	
Description	4-channel Analogue Input Module for Catalytic Bridge sensors
Electrical Connection	4 x 3-wire mV-Bridge
Supply Voltage	24 Vdc (18-32 Vdc)
Sensor Drive method	Constant current
Programmable Current Range	180-360 mA
Maximum Loop Resistance	Total Maximum loop resistance: 40 Ω at 200 mA (including Sensor) Total Maximum loop resistance: 27 Ω at 360 mA (including Sensor)
Input Range	±15mV to ±600 mV
Power Consumption	Maximum 1.2 W (Excluding Sensors)
Power Dissipation	Maximum 3.5 W
Connector Coding	Analogue Input Module connectors (TB1-TB4) are coded with coding keys to avoid mis-wiring
DIN Rail connector (Module Supply and Communication)	Maximum Current: 1.1 A (18-32 Vdc)

Terminal Identification	Label	Channel	Field Device
1	S	Input 1	Sensitive (+)
2	01		Signal
3	NS		Non-sensitive (-)
4	S	Input 2	Sensitive (+)
5	01		Signal
6	NS		Non-sensitive (-)
7	S	Input 3	Sensitive (+)
8	01		Signal
9	NS		Non-sensitive (-)
10	S	Input 4	Sensitive (+)
11	01		Signal
12	NS		Non-sensitive (-)

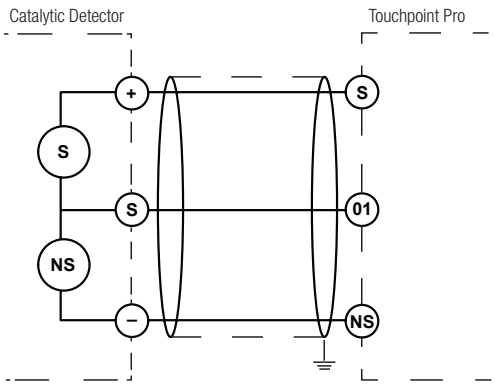

Catalytic Detector

Honeywell

Touchpoint Pro
Input/Output Modules

Specifications continued

Digital Input Module

Digital Input Module	
Description	4-Channel Digital Input Module for switched input devices
Electrical Connection	4 x 2-wire Switch Inputs
Supply Voltage	24 Vdc (18-32 Vdc)
Power Consumption	1 W maximum (no inputs connected)
Power Dissipation	2.8 W maximum
Field Terminals (TB1-TB4) Ratings	Maximum current of 14 mA through switched input device at 18-32 Vdc
EOL (End Of Line) Resistance	10 kΩ, 0.25 W, ±1%
INL (In-Line) Resistance	2.7 kΩ, 0.25 W, ±1%
Switch Input Device supply Voltage (Vs)	Minimum 15 V Maximum 32 V
Switch Input Device supply Current (Is)	Minimum 5 mA for Supervised OC/SC Switch ON condition Maximum 14 mA for Unsupervised Switch ON condition
Connector Coding	Digital Input Module connectors (TB1-TB4) are coded with coding keys to avoid mis-wiring
DIN Rail connector (Module Supply and Communication)	Maximum Current: 95 mA (18-32 Vdc)

Terminal Identification	Label	Channel
1	+	Input 1
2		
3	-	
4	+	Input 2
5		
6	-	
7	+	Input 3
8		
9	-	
10	+	Input 4
11		
12	-	

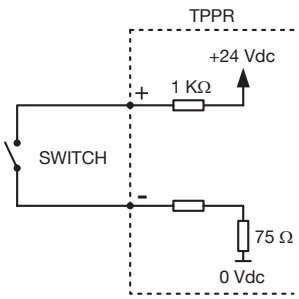

Unsupervised configuration

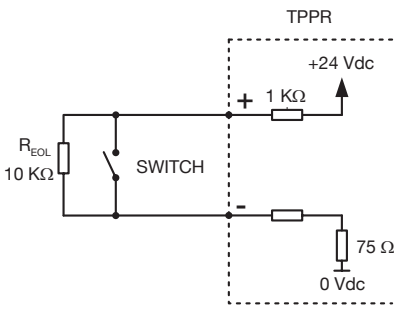

Supervised for open circuit configuration

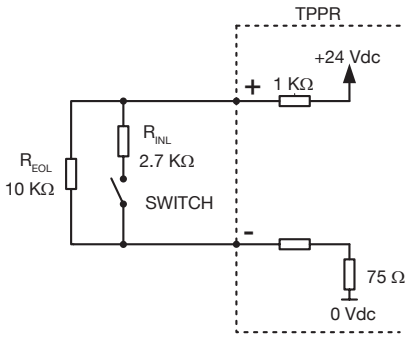

Supervised for open and short circuit configuration

Honeywell

Touchpoint Pro
Input/Output Modules

Specifications continued

Relay Output Module

Relay Output Module	
Description	4-channel Relay Output Module incorporating 4 single pole change over (SPCO) relays and 24 Vdc Auxiliary Power Output
Electrical Connection	4 x SPCO Relay Terminals (TB1 to TB4) 4 x 2-wire Auxiliary Output Terminals (TB5 to TB8)
Supply Voltage (Vs)	24 Vdc (18-32 Vdc)
Auxiliary Supply Voltage	Supply Voltage (Vs) – 0.7 V
Auxiliary Supply Current	Maximum 1.5 A
Power Consumption	Maximum 1.5 W (excluding auxiliary power consumption)
Power Dissipation	Maximum 2.3 W
Relay Contacts (TB1-TB4)	Maximum 5 A through one relay contact at 250 Vac / 30 Vdc (non-inductive) Maximum 8 A total through all four relay contacts at 250 Vac / 30 Vdc (non-inductive) Minimum 12 Vdc, 10 mA
Connector Coding	Relay output connectors (TB1-TB4) and auxiliary output connectors (TB5-TB8) are coded with coding keys to avoid mis-wiring. The relay output connectors (TB1-TB4) are coloured black to identify them for AC supply wiring
DIN Rail connector (Module Supply and Communication)	Maximum Current: 1.62 A (18-32 Vdc)

Terminal Identification	Label	Channel
1	NO	Relay 1
2	NC	
3	C	
4	NO	Relay 2
5	NC	
6	C	
7	NO	Relay 3
8	NC	
9	C	
10	NO	Relay 4
11	NC	
12	C	
13		V Aux 1
14	+V	
15	-V	
16		V Aux 2
17	+V	
18	-V	
19		V Aux 3
20	+V	
21	-V	
22		V Aux 4
23	+V	
24	-V	

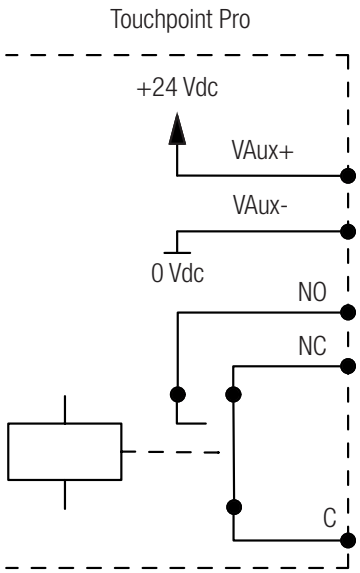

ROM connection

Honeywell

Touchpoint Pro
Input/Output Modules

Specifications continued

Input and Output Modules (I/O Modules)

Power Supplies	
TPPR-V-1000	Analogue Input Module 4-20 mA
TPPR-V-1010	Analogue Input Module mV-Bridge
TPPR-V-1020	Analogue Output Module 4-20 mA
TPPR-V-1030	Digital Input Module
TPPR-V-1040	Relay Output Module

Honeywell Analytics Gas Detection

Honeywell Analytics is able to provide gas detection solutions to meet the requirements of all applications and industries. Contact us in the following ways:

Headquarters

Europe, Middle East, Africa
Life Safety Distribution AG
Javastrasse 2
8604 Hegnau
Switzerland
Tel: +41 (0)44 943 4300
Fax: +41 (0)44 943 4398

gasdetection@honeywell.com

Customer Service:
Tel: +800 333 222 44 (Freephone number)
Tel: +41 44 943 4380 (Alternative number)
Fax: +800 333 222 55
Middle East Tel: +971 4 450 5800 (Fixed Gas Detection)
Middle East Tel: +971 4 450 5852 (Portable Gas Detection)

Americas
Honeywell Analytics Distribution Inc.
405 Barclay Blvd.
Lincolnshire, IL 60069
USA
Tel: +1 847 955 8200
Toll free: +1 800 538 0363
Fax: +1 847 955 8210

detectgas@honeywell.com

Asia Pacific
Honeywell Analytics
Asia Pacific
7F SangAm IT Tower, 434 Worldcup Buk-ro,
Mapo-gu, Seoul 03922
Korea
Tel: +82 (0) 2 6909 0300
Fax: +82 (0) 2 2025 0388

India Tel: +91 124 4752700

analytics.ap@honeywell.com

Technical Support Centres

Honeywell Analytics Ltd.
4 Stinsford Road
Nuffield Industrial Estate
Poole, Dorset, BH17 0RZ
United Kingdom
Tel: +44 (0) 1202 645 544
Fax: +44 (0) 1202 645 555

Honeywell Analytics
ZAC Athélia 4 - 375 avenue du Mistral
Bât B, Espace Mistral
13600 La Ciotat
France
Tel: +33 (0) 4 42 98 17 75
Fax: +33 (0) 4 42 71 97 05

Honeywell Analytics
Elsenheimerstrasse 43
80687 München
Germany
Tel: +49 89 791 92 20
Fax: +49 89 791 92 43

Honeywell Analytics
P.O. Box-45595
6th Street
Musaffah Industrial Area
Abu Dhabi
UAE
Tel: +971 2 554 6672
Fax: +971 2 554 6672

EMEA: HAexpert@honeywell.com
US: ha.us.service@honeywell.com
AP: ha.ap.service@honeywell.com

www.honeywellanalytics.com
www.raesystems.com

Honeywell Analytics
Experts in Gas Detection

BW Technologies by Honeywell

RAE SYSTEMS by Honeywell

Please Note:

While every effort has been made to ensure accuracy in this publication, no responsibility can be accepted for errors or omissions. Data may change, as well as legislation, and you are strongly advised to obtain copies of the most recently issued regulations, standards, and guidelines. This publication is not intended to form the basis of a contract.

13452_TPPR Spec Sheet_Input/Output Modules
V2_10/19_EMEAI

© 2019 Honeywell Analytics

Honeywell