Technical Manual

FOUNDATION®

XNX Foundation Fieldbus

Honeywell

Table of Contents

Introduction 3
Overview 3
Product Description 3
Foundation Fieldbus 3
Glossary 5
Wiring 7
Commissioning 9
Verification 9
Configuration 9
Device Description 9
Block Descriptions 10
Function Block (Analog Input) 10
Resource Block 10
Sensor Transducer Block 10
Common Block Operations 10
Specific Commands – Resource Block 11
WRITE_LOCK 11
FEATURES_SEL 11
Specific Parameters – Sensor Transducer Block 11
Specific Parameters – Analog Input Block 11
L_TYPE 11
XD_SCALE and OUT_SCALE 12
Status Data – Analog Input Block 12
Simulate Mode – Analog Input Block 13
Manual Mode 13
Simulate Mode 13
Operation 15
Configuration 16
Event History 17
Test 18
Calibration 19
Sample Calibration Procedure 20
Parameter and Error Tables 23
Resource Block Parameter Descriptions 23
Resource Block Parameter Views 25
Transducer Block Parameters 27
Analog Input Block Parameter Descriptions 32
Analog Input Block Parameter Views 34
Block Configuration Errors 35

Fieldbus Foundation Device Registration **37**
Warranty **39**
Warranty Statement **39**
Warranty Conditions **39**
Consumer Claims **40**
Index **41**

Introduction

Overview

This manual will assist the user in installing, operating, and maintaining the XNX Universal transmitter with the Foundation Fieldbus communication option. It is assumed that the user has a thorough understanding of operating principals for Foundation Fieldbus protocol, the XNX Universal transmitters, as well as the specific host control system in use[1]. Users should contact the host system vendor directly for configuration questions specific to their systems. Users should review the XNX Universal Transmitter Technical Manual prior to reading this manual.

Product Description

Foundation Fieldbus is one of three communication options availalble for the XNX Universal Transmitter. The Foundation Fieldbus option is a fully digital communication protocol conforming to the standards of Fieldbus Foundation. This enables the unit to interface with host control systems offered by manufacturers conforming to Foundation Fieldbus operating standards. As this type of control system platform utilizes a plant-wide communication “bus” network, wiring is accomplished by connecting to the network at any point near the process.

Foundation Fieldbus

Foundation Fieldbus is used in process control and monitoring. Process control refers to the monitoring and regulation of continuous processes such as flow, temperature, or tank levels. These types of processes are typically found in places like oil refineries, chemical plants, and paper mills.

Foundation Fieldbus can also be used for monitoring over long distances through distributed control, which means that control is performed by the devices instead of by a monitoring computer. Input, output, and process control devices configured on a Fieldbus network can run independently of a computer system.

Foundation Fieldbus is an all-digital, two-way, multi-drop communication system which brings control algorithms to gas detection instrumentation. Foundation Fieldbus supports digital encoding of data and many types of messages. Unlike many traditional systems, which require a set of wires for each device, multiple Foundation Fieldbus devices can be connected with a single set of wires. Foundation Fieldbus overcomes some of the disadvantages of proprietary networks by providing a standardized network for connecting systems and devices.

1 Illustrations in this manual were made with a Honeywell Experion host controller. Other host controllers are available.

Glossary

Term	Description
bump test	An exercise in which the functionality of a sensor is verified by exposing it to a gas concentration in excess of the alarm setpoints.
DD	Device Descriptions
ECC	Electrochemical cell
engineering units	%LEL : Percent of lower explosive limit %Vol: Percent of volume PPM: Parts per million mg/m3 : Miligram per cubic meter
EPKS	Experion Process Knowledge System
ferrite bead	A component which suppresses electromagnetic radio-frequency interference.
field bus	Communication protocol between field devices and control system
host controller	A component which monitors all field devices on network
IR	infrared
mA	milliamp, 1/1000th of an amp
mV	millivolt, 1/1000th of a volt
O-ring	A torus-shaped, flexible gasket which is compressed to create a seal between two rigid parts
Searchline Excel	A open path gas detector which monitors the presense of gas between the source and the detectors over a specific path length
simulation switch	a control which puts a device off-line for testing
Softwlock	A software selection which prevents a user from modifying the fieldbus device parameters
span calibration	An exercise used to specify the span level gas curve in a transmitter/ sensor
steel braid shield	A type of bundled wire with a woven covering designed to prevent radio frequency interference and to protect against abrasion
terminal block	Electrical connectors that collect a device's wire circuits in a single location
zero calibration	An exercise used to specify the zero level gas curve in a transmitter/ sensor

Wiring

A Fieldbus Foundation system replaces the analog 4 to 20 mA current loops common in other field buses with a simple two-wire line running from the control station to the field. This bus cable connects all devices in parallel. The system's information is transmitted digitally. The XNX gas transmitter supports most digital communication protocols (HART, MODBUS, Foundation Fieldbus, etc.) and a discrete output (relay). These are all derived from the primary safety channel, the analogue output (4-20 mA)."

Refer to the Fieldbus Foundation wiring guide (*wiringinstallationguide.pdf*, available at http://www.fieldbus.org[2]) before installation. The most common wiring schematics are shown in Figures 1 and 2. Consult the wiring guide for other topologies .

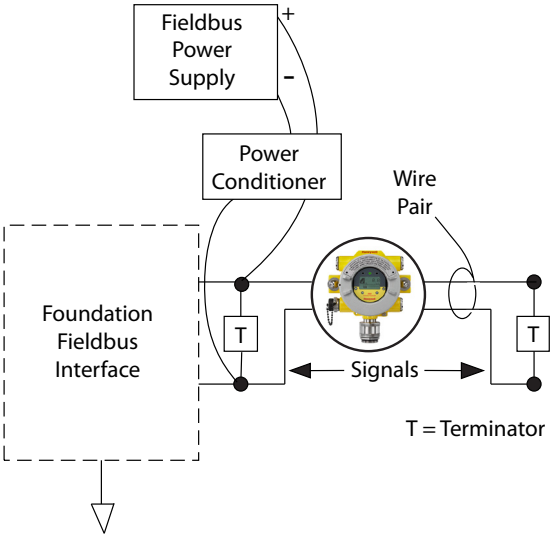

Figure 1: Simple Fieldbus network with single XNX transmitter

All installations must be made in accordance with local regulations and site policies.

2 accessed September 10, 2010

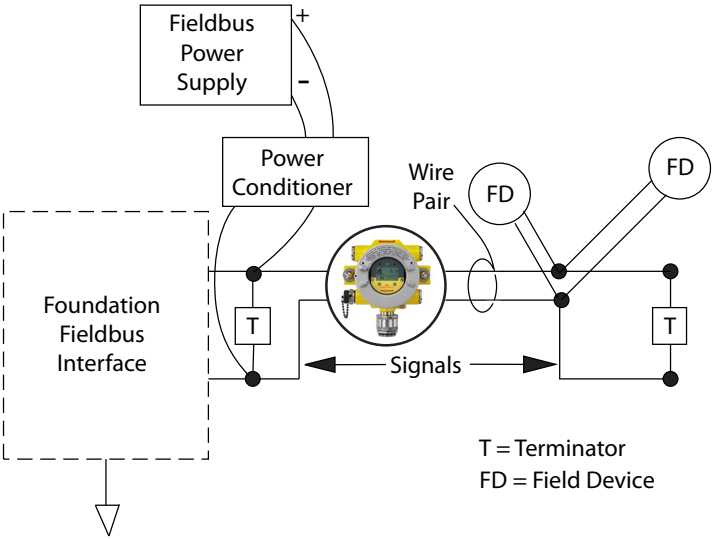

Figure 2: Fieldbus network with XNX transmitter and additional devices

Foundation Fieldbus connections to the XNX transmitter are made through a pluggable terminal block on the Foundation Fieldbus option board, shown in Figure 3. A simulation switch (SW5) is included on the board to enable/disable simulation mode. The Foundation Fieldbus H1 cable is connected through terminals 3-1 and 3-3. Terminal 3-1 is connected internally to 3-2. Similarly, terminal 3-3 is connected internally to 3-4. Terminals 3-5 and 3-6 are used for grounding the H1 Foundation Fieldbus comm cable shield. (see Figure 3).

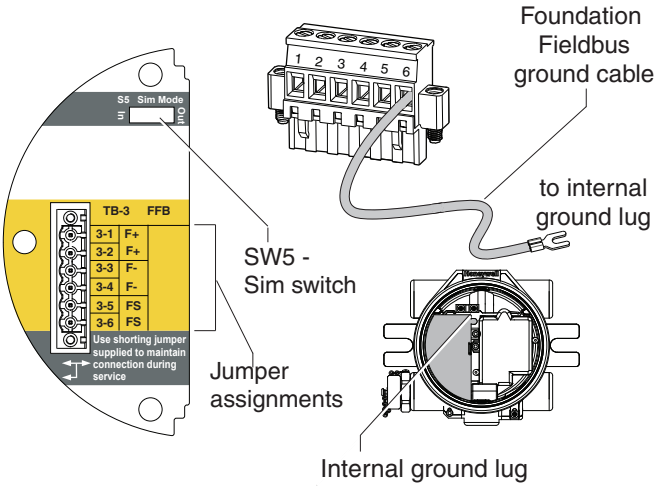

Figure 3: XNX Foundation Fieldbus option board and terminal block

Commissioning

Install and configure the XNX transmitter before commissioning the Foundation Fieldbus option board. In the final stages of boot-up, warnings and faults may be observed until configuration, calibration, and reset activities have been completed.

Configuration

This section provides startup and operating details for the communication portion of the transmitter. Details for all active function blocks are also included.

Device Description

A specific DD "Device Descriptor" file has been generated for this device and registered with the Fieldbus Foundation. The DD file can be found on the product CD. This file must be loaded into the host control system prior to proceeding with setup and configuration of the unit. If necessary, the DD file can also be obtained from Fieldbus Foundation's website (*www.fieldbus.org*[3]):

1. Navigate to "End User Resources."
2. Click on "Registered Products."
3. In the Manufacturers dropdown list, select "Honeywell Field Solutions."
4. Select "Analytical" in the category list.
5. Click on "Search."
6. Click "XNX Universal Transmitter."
7. Click on "Download DD/CFF file" to initiate the download.

Once installed, the host system will be capable of properly communicating with the XNX Universal Transmitter. For additional information regarding operation and installation of device descriptor files. Contact the manufacturer of the host control system directly.

3 accessed February 3, 2011

Block Descriptions

All Fieldbus devices are arranged in a “block” operating configuration. The Fieldbus Foundation has defined a set of standards that each unit must follow. As a result, block details remain consistent among products and manufacturers. A specially designated level, “Manufacturer Specific Parameters,” functions just as the name implies. Here, the Fieldbus Foundation allows manufacturers to add functions specific to their devices. Additional information covering definitions and descriptions can be found at *www.fieldbus.org*[4].

Function Block (Analog Input)

The function block is made up of a series of parameters which provide the basis for system control and operation. Standard sets of function blocks have been defined by the Fieldbus Foundation. These blocks are available for input and output communication via the network.

The core duties of the Analog Input (AI) block are to process incoming signals from the sensing element (gas concentration in this case) and to make the data available for use in other function blocks. This data is formatted in user-defined engineering units.

Resource Block

Each device has one resource block. The resource block is used to describe characteristics of the individual device. Parameters such as device name, manufacturer, and serial number are located here. There are no linkable parameters located within this block.

Sensor Transducer Block

The sensor transducer block contains configuration data specific to the individual device. Data such as sensor type and calibration date are located within this block.

Common Block Operations

Each of the blocks within the transmitter share a common set of programming modes. By setting a specific operating mode, the user will be able to dictate the output of the transmitter to the network bus.

Description	Function
AUTO	Normal operating mode. All data input, calculations and data output for the block will function
Out Of Service (OOS)	Setting operating mode to OOS disables all function executions by the block.

4 Accessed September 10, 2010.

Specific Commands – Resource Block

This section outlines common commands that are available within the Resource Block.

WRITE_LOCK

The WRITE_LOCK parameter is used to prevent parameter changes from occurring within the device. When enabled, the only accessible command remains WRITE-LOCK so that the parameter may be cleared. When cleared, writing to the device is again enabled. When cleared, an alert is generated by WRITE_ALM to indicate a change was made. The alarm priority corresponds to the WRITE_PRI parameter.

FEATURES_SEL

The FEATURES_SEL command is used to turn on and off additional features supported by the device. At this time, REPORTS, SOFTWLOCK, and multi-bit alarming are supported.

Specific Parameters – Sensor Transducer Block

This section outlines common commands available within the Sensor Transducer Block.

- Information
- Test
- Calibrate (Zero/Span)
- Configuration

This block does not contain parameters that allow engineering units to be modified (modifications can be made through the analog input block). Units within the Sensor Transducer Block automatically track values programmed by the XD_SCALE parameter.

Specific Parameters – Analog Input Block

These commands that are available within the AI Block.

L_TYPE

This parameter is used to define the relationship between the measured process value (Sensor Transducer Block) and the output of the AI Block. XNX supports all linearization types. Setting this parameter to DIRECT will pass the Transducer Block information without modification (i.e., the AI output will be identical to the Transducer Block). Values between the Sensor Transducer Block and the AI Block will remain linear.

XD_SCALE and OUT_SCALE

These parameters are used to set the engineering units and scaling factors associated with the data coming into the AI block, as well as being generated by the AI block. Each of the parameters may be set to 0%, 100%, or to associated engineering units. These parameters are programmed differently, depending on the L_TYPE that is selected.

The supported engineering units are PPM, %LEL, LELm, mg/m^3, and %VOL[5]. To prevent configuration errors from occurring, select ONLY units supported by the device. Engineering units are not writable.

L_TYPE = DIRECT

When the desired output of the AI block is the same as the measured variable. The settings are:

XD_SCALE = same as range of process

OUT_SCALE = set same as XD_SCALE

Example:

Process Description Line sees 0-100 %LEL with %LEL as desired output.

XD_SCALE 0-100 % LEL

OUT_SCALE 0-100 % LEL

XD Scale is not writable.

Process Alarms

The OUT data produced by the AI Block is compared to values programmed into the alarms. If a value has been reached, the associated alarm is initiated. Available alarms are:

HI_LIM = High alarm

HI_HI_LIM = High High alarm

LO_LIM = Low alarm

LO_LO_LIM = Low Low alarm

The HI_LIM, HI_HI_LIM, LOW_LIM, LOW_LOW_LIM are used by the AI block in the host.

Status Data – Analog Input Block

In normal operation, either actual or calculated values are passed from

[5]The user must create these engineering units if they are not listed in the host control system.

the Sensor Transducer Block to the AI Block for further processing. Along with that data, a STATUS condition is also sent. Potential conditions are:

STATUS = GOOD, no problems with hardware or data

STATUS = BAD, problems found with either hardware or data passed from Sensor Transducer Block

STATUS = UNCERTAIN,

The STATUS field is used by the AI block in the host.

Simulate Mode – Analog Input Block

When testing, it is possible to force data out of the analog input block. This procedure could be used to test a control function or to test the operation of the downstream device that received the data. Two methods exist for data output:

Manual Mode

Manual mode forces the output data from the AI Block to the desired value. It does not change the status of the STATUS parameter. To initiate manual mode, place the TARGET MODE of the AI Block to MANUAL. The OUT.VALUE can now be modified to reflect the desired output value.

Simulate Mode

Simulate mode forces the output data from the AI block to a desired value. It also changes the STATUS parameter to the corresponding value. To initiate Simulate mode:

1. Move the SIM switch on the transmitter to ON. The SIM switch is located behind the transmitter, above the Foundation Fieldbus connection terminal. The device is now in simulate mode.
2. Set the TARGET MODE to AUTO to change both the OUT.VALUE and OUT.STATUS.
3. Set the SIMULATE_ENABLE_DISABLE parameter to the ACTIVE state.
4. Enter the desired value into the SIMULATE_VALUE parameter to force the output of the OUT.VALUE parameter, along with setting the OUT.STATUS to the correct value.

If any errors occur while performing this procedure, reset the SIM switch. This will clear error conditions and allow the device to resume operation.

Operation

The XNX Foundation Fieldbus interface facilitates remote access to all features of the local user interface including displaying status, testing, calibrating, and configuring. A device descriptor (DD) file is required to interface with the XNX transmitter. The following screens, using an Experion system as a host controller, show some of the features of the Foundation Fieldbus interface for the XNX transmitter.

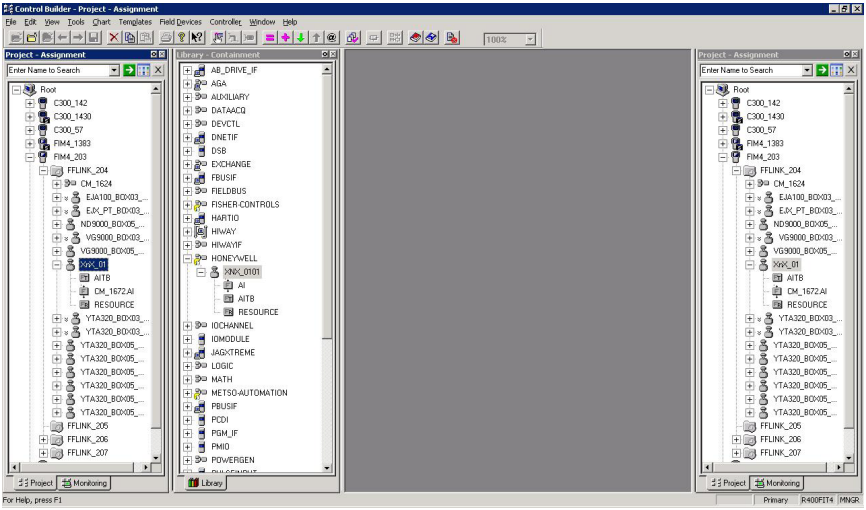

Figure 4: Presentation of XNX Data by Experion (simulator shown)

Configuration

All user settings of the XNX transmitter can be made either at the local user interface or over Foundation Fieldbus. The configuration menu simplifies setup of alarm levels as shown in Figure 6. Time, units, and other parameters can also be configured.

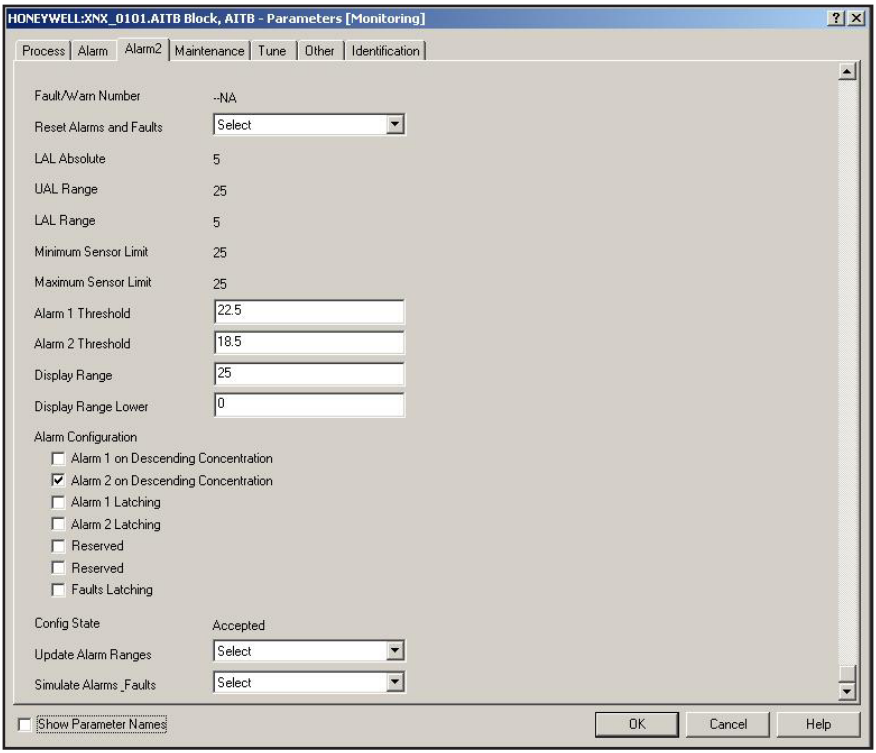

Figure 5: Foundation Fieldbus configuration display

Event History

The XNX transmitter maintains a record of all significant events, all of which can be accessed from Foundation Fieldbus interface. All alarms, warnings, and faults are recorded. Additionally, over 60 types of informational events are defined to record important transactions such as recalibrations or configuration changes. Every event has a timestamp and 1280 records are maintained. Figure 7 is the event history view of an Experion screen.

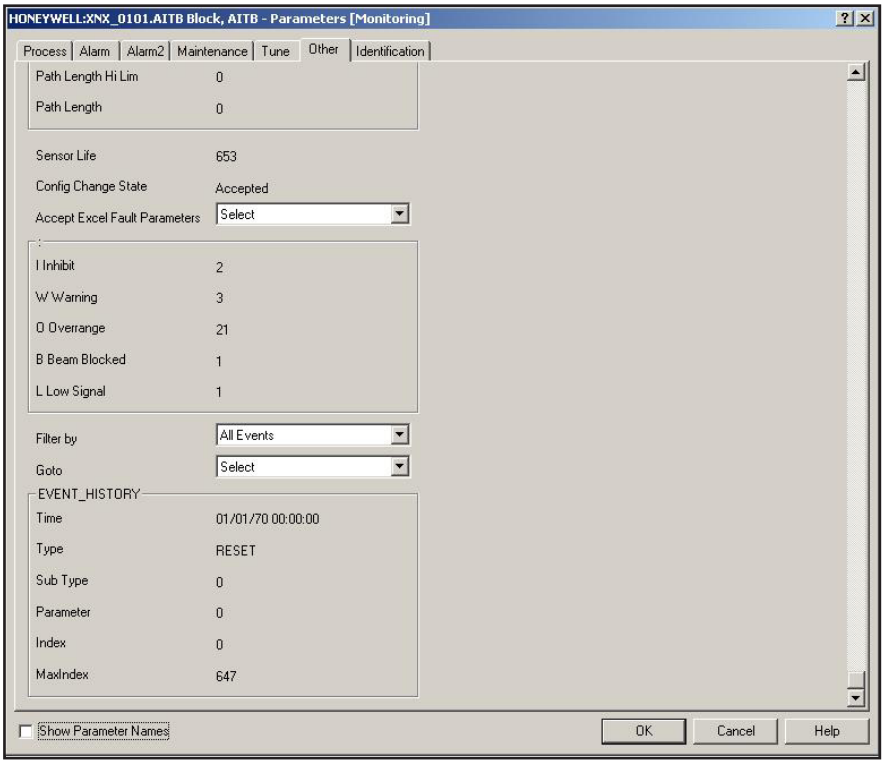

Figure 6: Foundation Fieldbus event history display

Test

The test menu provides methods for accomplishing common tasks, such as inhibiting the output, exercising the analog output, or simulating alarms or faults. Figure 8 is the Experion test view.

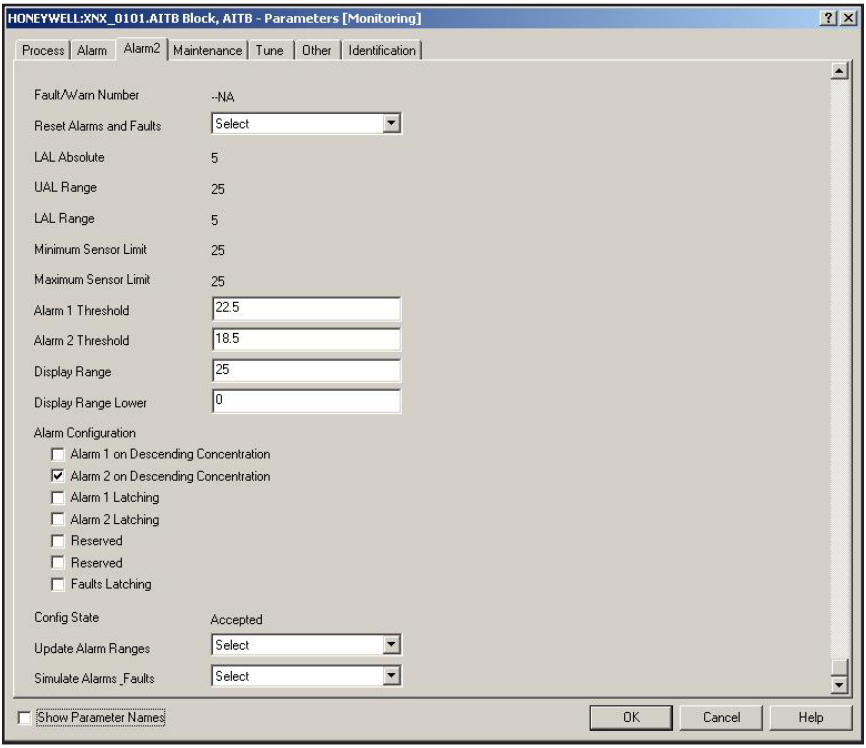

Figure 7: Foundation Fieldbus test display

Calibration

The calibration menu permits zero or span calibration and bump testing. Additionally, when fitted with a Searchline EXCEL gas detector, the calibration menu displays the optical signal strength for mechanical alignment. The gas calibration operation is shown in Figure 8 and detailed in the procedure that follows.

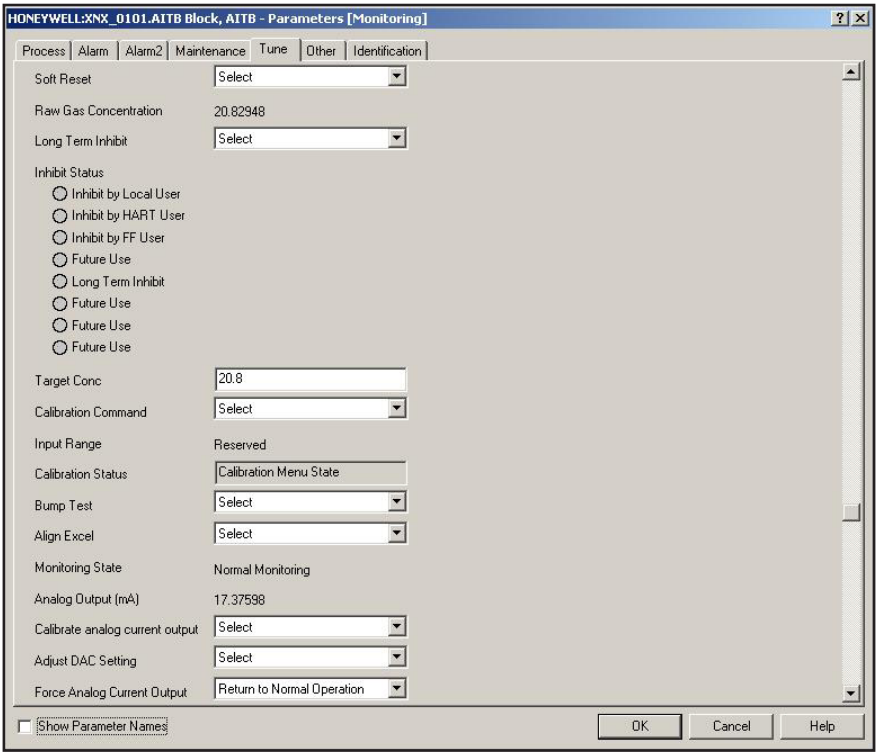

Figure 8: Foundation Fieldbus calibration display

Caution: Do not back out of a menu selection while a calibration is in progress.

Sample Calibration Procedure

This procedure will vary according to the type of sensor connected to the XNX Universal Transmitter.

1. Connect the sensor to the XNX transmitter.
2. Connect the Foundation Fieldbus handheld unit and establish communication with the XNX transmitter.
3. Navigate to the Device Calibration menu on the Foundation Fieldbus user interface.
4. Check the calibration status. The “In Calibration Menu State” message will be displayed.
5. Select “Start Calibration.” A window with the message “Processing Request” will be displayed, followed by “Calibration Status. Apply Zero Air.”
6. Select “Finish.” The window will close and the calibration status will change to “Apply Zero Air.”
7. Apply zero (ambient) air to the sensor.
8. Select “Next Step.” A window with the message “Processing Request” will appear, followed by “Wait until raw conc. is stable and in range.”
9. Select “Finish.” The window will close. and the calibration status will change to “Wait until raw conc. is stable and in range.” The raw concentration will be near 0.0000. The input range will be “in range.”
10. Select “Next step. The message “Processing request” will be displayed followed by “Press NEXT to Start Zero Calibration.”
11. Select “NEXT.” A window with the message “Processing Request” will be displayed, followed by “Calibration status: Processing calibration.”
12. Select “Finish.” The window will close and the calibration status will display “Processing calibration.”
13. If the zero calibration is unsuccessful, the calibration status will change to “Zero Cal Failed. Press End Cal and Start Over. Proceed to step 23 to end the calibration and start a new one. If the zero calibration is completed successfully, the calibration status will change to “Zero Cal Success. Press Next Step.” Select “Next Step.” A “Processing Request” message will be displayed, followed by “Calibration Status: Apply Target Concentration.”
14. Select “Next.”
15. Enter the desired target concentration (e.g., 50% LEL).
16. Select “Next.” A window with the message “Processing Request” will be displayed followed by “Target Concentration Being Accepted. Check Calibration Status.”

17. Select “Finish.” The window will close.
18. Apply the specified gas (e.g., 50% LEL) to the sensor.
19. Select “Next Step.” A window with the message “Processing Request” will be displayed, followed by “Press NEXT To Start Span Cal.”
20. Select “Next.” A window with the message “Processing Request” will be displayed, followed by “Calibration Status: Processing Calibration.”
21. Select “Finish.” The window will close.
22. The calibration status will display a “Processing Calibration” message. If the span calibration was unsuccessful, the calibration status will change to “Span Cal Failed. Press Next Step to Retry.” Repeat steps 14 through 21. If the span calibration was successful, the calibration status will change to “Span Cal Success. Press End Calibration.”
23. Select “End Calibration.” A window with the message “Processing Request” will be displayed, followed by “Calibration Status: Calibration Menu State.”
24. Select “Finish.” The window will close.

Parameter and Error Tables

Resource Block Parameter Descriptions

Index	Parameter Mnemonic	Description
1	ST_REV	The revision level of the static data associated with this block.
2	TAG_DESC	Can be used to identify grouping of blocks
3	STRATEGY	User information
4	ALERT_KEY	ID# of plant unit
5	MODE_BLK	Contains the modes available to the block
6	BLOCK_ERR	Contains error status
7	RS_STATE	State of the function block
8	TEST_RW	Used only for conformance testing
9	DD_RESOURCE	String identifying the tag of the resource
10	MANUFAC_ID	Manufacturer ID# calc = 0x48574C
11	DEV_TYPE	Used to locate the DD file
12	DEV_REV	MFG rev #
13	DD_REV	Rev # of the DD
14	GRANT_DENY	Options for controlling access to Host
15	HARD_TYPES	The types of hardware available as Chan #
16	RESTART	Allows restart to be initiated
17	FEATURES	Shows supported resource block options
18	FEATURE_SEL	Selects resource block options
19	CYCLE_TYPE	ID's block execution methods available
20	CYCLE_SEL	Selects execution method for this resource
21	MIN_CYCLE_T	Time duration of shortest cycle interval
22	MEMORY_SIZE	Available config memory in the empty resource
23	NV_CYCLE_T	Interval between writing non-volatile memory
24	FREE_SPACE	Free memory – (AIC = 0%)
25	FREE_TIME	Free processing time (AIC = 0%)
26	SHED_RCAS	Time duration at which to give up writing to RCAS locations
27	SHED_ROUT	Time duration at which to give up writing to ROUT location

Index	Parameter Mnemonic	Description
28	FAULT_STATE	Set by loss of communication to output block
29	SET_FSTATE	Allows fault state to be manually set
30	CLR_FSTAT	Clear fault state
31	MAX_NOTIFY	Max # of unconfirmed alert notify messages
32	LIM_NOTIFY	Set MAX_NOTIFY
33	CONFIRM_TIME	Min time between retries of alert reports
34	WRITE_LOCK	Disable write capability
35	UPDATE_EVT	Alert generated by any change to static data
36	BLOCK_ALM	System failure information
37	ALARM_SUM	Alert status
38	ACK_OPTION	Select which alarms will be automatically acknowledged.
39	WRITE_PRI	Priority of alarm generated by clearing the write lock
40	WRITE_ALM	Alert generated if write lock is cleared
41	ITK_VER	Major rev of interoperability test case

Resource Block Parameter Views

Index	Parameter Mnemonic	View_1	View_2	View_3	View_4
1	ST_REV	2	2	2	2
2	TAG_DESC				
3	STRATEGY				2
4	ALERT_KEY				1
5	MODE_BLK	4		4	
6	BLOCK_ERR	2		2	
7	RS_STATE	1		1	
8	TEST_RW				
9	DD_RESOURCE				
10	MANUFAC_ID				4
11	DEV_TYPE				2
12	DEV_REV				1
13	DD_REV				1
14	GRANT_DENY		2		
15	HARD_TYPES				2
16	RESTART				
17	FEATURES				2
18	FEATURE_SEL		2		
19	CYCLE_TYPE				2
20	CYCLE_SEL		2		
21	MIN_CYCLE_T				4
22	MEMORY_SIZE				2
23	NV_CYCLE_T		4		
24	FREE_SPACE		4		
25	FREE_TIME	4		4	
26	SHED_RCAS		4		
27	SHED_ROUT		4		
28	FAULT_STATE	1		1	
29	SET_FSTATE				
30	CLR_FSTAT				
31	MAX_NOTIFY				1
32	LIM_NOTIFY		1		
33	CONFIRM_TIME		4		
34	WRITE_LOCK		1		

Index	Parameter Mnemonic	View_1	View_2	View_3	View_4
35	UPDATE_EVT				
36	BLOCK_ALM				
37	ALARM_SUM	8		8	
38	ACK_OPTION				2
39	WRITE_PRI				1
40	WRITE_ALM				
41	ITK_VER				2
	Totals	22	30	22	31

Transducer Block Parameters

Index	Parameter Mnemonic	Description
1	ST_REV	The revision level of the static data associated with this block
2	TAG_DESC	Can be used to identify grouping of blocks
3	STRATEGY	User information
4	ALERT_KEY	User identification number
5	MODE_BLK	Contains the modes available to the block
6	BLOCK_ERR	Contains error status
7	UPDATE_EVT	This is generated when the static data in the block is changed
8	BLOCK_ALM	Identifies that a problem exists in the system
9	TRANSDUCER_ DIRECTORY	Specifies the number and starting indices in the transducer block
10	TRANSDUCER_ TYPE	Transducer Type identification
11	XD_ERROR	Additional error codes
12	COLLECTION_DIRECTORY	Specifies the number, starting indices, and DD item identifications
13	PRIMARY_ VALUE	The measured value
14	DATE_FORMAT	Classification of a day as a specific calendar date is the format used to express that date
15	STR_DEVICE_ DATE_TIME	Date and Time on the device
16	TIME_DATE_ STAMP	Date and Time Stamp on the device status
17	SENSOR_TYPE	Connected Sensor Type identification
18	GAS_NAME	Sensor Gas Name Identification
19	UNIT_STRING	Sensor Gas Measuring Unit Identification
20	SEN_SW_VER	Connected Sensor Software Version
21	SEN_SN	Connected Sensor Serial Number
22	ZEN_SN	Device Serial Number

Index	Parameter Mnemonic	Description
23	CURR_ALM_ LEVEL	Identifies present alarm level in the device
24	ACTIV_INSTR_ FAULT	Identifies Active Instrument Fault in the device
25	RESET_ ALMS_N_FAULTS	Performs Reset of All Alarms and Faults present in Device
26	LOWER_ALM_LIMIT	Specifies Lower device alarm Limit
27	UPPER_ALM_ LIMIT_RANGE	Specifies maximum possible limit for device alarm
28	LOWER_ALM_LIMIT_ RANGE	Specifies minimum possible limit for device alarm
29	DEVICE_MIN_RANGE	Specifies minimum possible range for device with connected sensor
30	DEVICE_MAX_ RANGE	Specifies maximum possible range for device with connected sensor
31	ALM_ THRESHOLDS_ LOW,	Specified lower limit for Alarm Threshold
32	ALM_THRESHOLDS_ HIGH,	Specified higher limit for Alarm Threshold
33	DISPLAY_RANGE	Specifies display range for device with connected sensor
34	DISPLAY_ RANGE_LOWER	Specifies display range lower limit for device with connected sensor
35	RELAY_ALM_CFG,	Identifies Alarm Latching and Non-latching configuration
36	CONFIG_STATE_ ALM	Configuration alarm for State of device after change in configuration
37	ACCEPT_ CONFIG_ CHANGE_ALM	Configuration State of device after configuration changes accepted by user
38	START_IR_POLLING	Request of IR sensor parameters from device
39	POWER_SUPPLY	Power supply measured by device i.e device power supply

Index	Parameter Mnemonic	Description
40	POWER_ SUPPLY_ VOLTAGE_33	Power supply measured by option board connection i.e option board power supply
41	POWER_SUPPLY_ VOLTAGE_SENS_240	Power supply measured by connected sensor. i.e., sensor power supply
42	POWER_SUPPLY_ VOLTAGE_SENS_50	Power supply measured by connected sensor (Internal) i.e Sensor Internal power supply
43	WIN_TEMP	Window Temperature --applicable to IR (Excel) sensor only
44	SENSOR_TEMP	Device Temperature
45	UNIT_TEMP	Temperature measuring Unit Identification
46	RC_OPTICAL_ PARAMETERS	Optical parameters from connected IR sensor
47	BLOCK_FAULT_ TIME	Identifies time to detect fault by IR (Excel) senor after beam is blocked longer than the value set
48	OTHER_FAULT_ TIME	Identifies time to report fault by IR (Excel) senor after beam is blocked longer than the value set
49	LOW_SIGNAL_ LEVEL	Identifies lowest signal level for IR (Excel)Sensor connected to device
50	RESET_EXCEL	Software reset to IR (Excel / Optima) sensors
51	RAW_GAS_ CONC	Specifies gas cancentration measured by sensor during calibration process
52	INHIBIT_ DEVICE_LONG_ TERM	Identifies device inhibited by user for longer time
53	INHIBIT_DEVICE_STATUS	Identifies inhibit status of device
54	SPAN_CAL_GAS_CONC	Specified Gas concentration for Span calibration of sensor
55	CLB_OPT	Specifies Sensor Calibration options

Index	Parameter Mnemonic	Description
56	CLB_STATUS,	Specifies Sensor Calibration Status
57	CLB_HELP_ STATUS,	Specifies Sensor Calibration Help Status
58	BUMP_TEST_ OPT	Specifies Bump Test for connected Sensor from device
59	CALIB_ INTERVAL	Specifies Sensor Calibration Interval
60	SIMULATE_OPT	Specifies Sensor status simulation from device
61	ALIGN_EXCEL,	Performs Alignment for Excel type IR sensor
62	CURR_MON_ STATE,	Identifies Monitoring state of device
63	RC_PATH_ LENGTH	Specifies Path Length for Excel type IR sensor
64	SENSOR_LIFE,	Specifies Sensor life remaining
65	CONFIG_STATE	Configuration State of device
66	ACCEPT_ CONFIG_ CHANGE	Configuration State of device after accepting configuration changes
67	RC_MA_ SETTINGS	mA settings for device
68	ANLG_CURR_ OP,	Identifies 4-20 mA output current from device
69	CLB_CURR_OP	Calibration of 4-20 mA output current from device
70	CLB_CURR_ DAC_CNT	Calibration of 4-20 mA output current from device with DAC settings
71	FORCE_ANLG_ CURRENT	Force 4-20 mA output current from device
72	GAS_NAME_SCROLL,	Identifies scrolling for list of Gases for connected sensor to device
73	INFO_CAL_ INDEX,	Identifies Index for Gas
74	CURR_CAL_ INDEX,	Identifies Scrolling Index for Gas

Index	Parameter Mnemonic	Description
75	SEL_GAS_CLB_ OPTION	Calibration of connected sensor to device
76	MV_SENSOR_ TYPE_INDEX_ ACTUAL	Identifies actual Index for connected mV sensor
77	MV_SENSOR_TYPE	Identifies connected mV sensor type
78	MV_SENSOR_ TYPE_SCROLL	Identifies Scrolling Index for connected mV sensor
79	MV_SENSOR_TYPE_INDEX	Identifies Index for connected mV sensor
80	MV_SEL_ OPTION	Identifies mV sensor selection options
81	SEL_EVENT_ FILTER_TYPE	Specifies Event filter type
82	SEL_EVENT_ HISTORY_OPT	Specifies Event History options
83	EVENT_ HISTORY	Specifies Event History

Analog Input Block Parameter Descriptions

Index	Parameter Mnemonic	Description
1	ST_REV	The revision level of the static data associated with this block.
2	TAG_DESC	Can be used to identify grouping of blocks
3	STRATEGY	User information
4	ALERT_KEY	ID# of plant unit
5	MODE_BLK	Contains the modes available to the block
6	BLOCK_ERR	Contains error status
7	PV	Primary analog value
8	OUT	Primary analog value calculated
9	SIMULATE	Allows for manual input of I/O values
10	XD_SCALE	The scale and unit values from the transducer block
11	OUT_SCALE	The scale and unit of this block
12	GRANT_DENY	Options for controlling access of host computers and local control panels to operating, tuning, and alarm parameters.
13	IO_OPTS	Option which the user may select to alter I/O block processing
14	STATUS_OPTS	Option which the user may select in the block proc. of status
15	CHANNEL	The logical hardware channel connected to the I/O block
16	L_TYPE	Determines how parameters
17	LOW_CUT	Limit used in sq rt processing
18	PV_FTIME	Time constant of a single exponential filter for the PV
19	FIELD_VAL	Raw value of the field device in % of range
20	UPDATE_EVT	This alert is generated by any change to the static data
21	BLOCK_ALM	System failure information

Index	Parameter Mnemonic	Description
22	ALARM_SUM	Alert status
23	ACK_OPTION	Select which alarms will be automatically ack.
24	ALARM_HYS	Alarm hysteresis in %
25	HI_HI_PRI	Priority of HH alarm
26	HI_HI_LIM	Setting of HH alarm
27	HI_PRI	Priority of H alarm
28	HI_LIM	Setting of H alarm
29	LO_PRI	Priority of L alarm
30	LO_LIM	Setting of L alarm
31	LO_LO_PRI	Priority of LL alarm
32	LO_LO_L IM	Setting of LL alarm
33	HI_HI_ALM	Status of HH alarm
34	HI_ALM	Status of H alarm
35	LO_ALM	Status of L alarm
36	LO_LO_ALM	Status of LL alarm

Analog Input Block Parameter Views

Index	Parameter Mnemonic	View_1	View_2	View_3	View_4
1	ST_REV	2	2	2	2
2	TAG_DESC				
3	STRATEGY				2
4	ALERT_KEY				1
5	MODE_BLK	4		4	
6	BLOCK_ERR	2		2	
7	PV	5		5	
8	OUT	5		5	
9	SIMULATE				
10	XD_SCALE		11		
11	OUT_SCALE		11		
12	GRANT_DENY		2		
13	IO_OPTS				2
14	STATUS_OPTS				2
15	CHANNEL				2
16	L_TYPE				1
17	LOW_OUT				4
18	PV_FTIME				4
19	FIELD_VAL	5		5	
20	UPDATE_EVT				
21	BLOCK_ALM				
22	ALARM_SUM	8		8	
23	ACK_OPTION				2
24	ALARM_HYS				4
25	HI_HI_PRI				1
26	HI_HI_LIM				4
27	HI-PRI				1
28	HI_LIM				4
29	LO_PRI				1
30	LO-LIM				4
31	LO_LO_PRI				1
32	LO_LO_LIM				4
33	HI_HI_ALM				
34	HI_ALM				
35	LO_ALM				
36	LO_LO_ALM				
	Totals	31	26	31	46

Block Configuration Errors

Error	Solution
Accept New Alarm Configuraiton	New alarm configuration for device is not accepted at device. Select Accept Alarm Configuration
Accept New Excel Fault Parameters	New Excel fault configuration for device is not accepted at device. Select Accept Configuration
LinkConfiguration	Not applicable
SimulationActive	Device is in simulation state. Exit simulation being performed on device.
DeviceFaultState	Device is in fault state. Refer fault code to dignostic fault on device.
Maint. Needed soon	Device is in warning state. Refer warning code to dignostic warning on device.
Maint. Needed Now	Device is in fault state. Refer fault code to dignostic fault on device.
Out Of Service	Device not in service. Contact HA or force device in Auto mode

If the XNX transmitter displays fault code F130 (“Option Communication Failure”), it has detected the Foundation Fieldbus board but is not communicating with it. Check all wiring. If the fault code persists, contact Honeywell Analytics’ Service Department for further instructions.

Fieldbus Foundation Device Registration

FOUNDATION™
DEVICE REGISTRATION

Manufacturer: Honeywell Field Solutions

Model: XnX Universal Transmitter
Type: Gas Detector

Device ITK Version: 5.2.0
Device Test Campaign: IT074400

Test Report: FF-527-(74400)

Stack Test Campaign: CT0131FF
Physical Layer Test Report: PT-357
Physical Layer Profiles: 113, 123

Manufacturer ID: 0x48574C
Device Type: 0x0009
Device Revision: 0x01

	Filename	CRC	ITK Version
Device Description:	0101.ffo	C6510BDA	5.2.0
	0101.sym	6FDE0E9D	5.2.0
Capability File:	010101.cff	E5A7DFDE	5.2.0

Tested Features:
Resource Block
Alarms and Events
Function Block Linking
Multi-bit Alert Reporting
Trending
Field Diagnostics
Analog Input Function Block

18 January 2011

Registration Date

Richard J. Timoney
President and CEO

Warranty

Warranty Statement

All products are designed and manufactured to the latest internationally recognized standards by Honeywell Analytics under a Quality Management System that is certified to ISO 9001.

The XNX Universal Transmitter is warranted by Honeywell Analytics (herein referred to as 'HA') to be free from defects in material or workmanship under normal use and service for:

Device	Warranty Terms
XNX Universal Transmitter (excludes consumables)	**36 months** from date of shipment to buyer
XNX Electrochemical Sensors (Part Number XNX-XS****) **Multi-Purpose Detector (MPD)**	**12 months** from date of commissioning by an approved Honeywell Analytics representative or **18 months** from date of shipment from Honeywell Analytics Whichever is sooner

Service in the field or at the customer's premises is not covered under these warranty terms. Time and travel expenses for on-site warranty services will be charged at Honeywell Analytics' normal billing rates. Contact your Honeywell Analytics Service Representative for information on Service Contracts.

Warranty Conditions

1. The Honeywell Analytics (HA) Limited Product Warranty only extends to the sale of new and unused products to the original buyer where purchased from HA or from a HA authorized distributor, dealer or representative. Not covered are: consumable items such as dry-cell batteries, filters and fuses or routine replacement parts due to the normal wear and tear of the product; any product which in HA's opinion has been altered, neglected, misused or damaged by accident or abnormal conditions of operation, handling, use or severe sensor poisoning; defects attributable to improper installation, repair by an unauthorized person or the use of unauthorized accessories/parts on the product
2. Any claim under the HA Product Warranty must be made within the warranty period and as soon as reasonably possible after a defect is discovered. If a Warranty claim is being sought it is the responsibility of the buyer to obtain a Service Event number (SE#) from HA and if practical return the product clearly marked with the SE# and a full description of the fault.
3. HA, at its sole discretion, may elect to send replacement goods to buyer prior to receipt of the defective goods. Buyer agrees to return defective goods with in 30 days or to pay for the replacement goods.
4. Buyer is responsible for transportation costs from the buyer's location to HA.

HA is responsible for transportation costs from HA's location to the buyer.

5. If in the case of a fixed installation or when it is not practical to return the product, the buyer should submit a claim to HA Service Department. A service engineer will attend on site on a day rate basis. Where a valid warranty claim is identified, the faulty product will be repaired or replaced free of charge. A warranty claim will be accepted if all conditions contained within this Warranty are met.
6. When, in the opinion of HA, a warranty claim is valid, HA will repair or replace the defective product free of charge and send it or any replacement back to the buyer. If, in the opinion of HA the warranty claim is not valid, HA will, at the option of the buyer, return the unit unaltered at the buyer's expense, repair the unit at the then prevailing rates, replace the unit with an appropriate replacement item at the then prevailing price, or discard the unit. HA reserves the right to charge for any attendance by its service engineer at the usual rates in force at the time the claim was received.
7. In no event shall HA's liability exceed the original purchase price paid by the buyer for the product.

Consumer Claims

If you purchased your HA product as a consumer, the above warranty conditions do not affect your rights under any applicable consumer protection legislation.

Honeywell Analytics reserves the right to change this policy at any time. Contact Honeywell Analytics for the most current warranty information.

Index

A

alarm levels 16
alarms 17
alarms, simulating 18
alignment, mechanical 19
analog block parameters 34, 37
analog input 10
analog input block 11, 12, 13
analog input block parameters 39
analog output, exercising 18

B

block configuration errors 39
block descriptions 9, 10
bump testing 5, 19

C

calibration 10, 19, 20
commissioning 9
common block operations 10
common block operations 10
communication “bus” network 3
communication options 3
configuration 7, 9, 15, 16, 17

D

DD, see “device descriptor file” 9
device descriptor file 9, 15
device name 10
device registration 41
distributed control 3

E

ECC. *See* electrochemical cell
electrochemical cell 5
Emerson 475 15
engineering units, modifying 11
EPKS. *See* Experion Process Knowledge System
event history 16
event history display 17
Experion 15
Experion Process Knowledge System 5

F

fault code F130 35
faults 9, 17
faults, simulating 18
FEATURES_SEL 11
ferrite bead 4, 5
field bus 5
Fieldbus Foundation website 7, 9, 10
Foundation Fieldbus 3
function block 10
function block (analog input) 10

G

glossary 5

H

host controller 5, 15

I

informational events 17
infrared 5
IR. *See* infrared

L

local user interface 15
L_TYPE 11
L_TYPE = DIRECT 12

M

mA. *See* milliamp
manual mode 13
manufacturer 10
mechanical alignment 19
milliamp 5
millivolt 5
mV. *See* millivolt

O

operation 15
optical signal strength 19
option board 8
O-ring 5
output, exercising analog 18
output, inhibiting 18

Index (continued)

OUT_SCALE 12
overview 3

P

process alarms 12
process control 3
product description 3

R

remote access 15
reports 11
resource block 10, 11
resource block parameter descriptions 25
resource block parameters 7, 20, 24, 27

S

Searchline EXCEL 19
sensor transducer block 10, 11
sensor type 10
serial number 10
shield, steel braid 5
SIM switch 13
simulate mode – analog input block 13
simulation switch 5, 8
Softwlock 5, 11
span calibration 5, 19
specifications 37
specific commands,
  analog input block 11
  resource block 11
  sensor transducer block 11
status data – analog input block 12
status data – analog input block 12

T

terminal block 5, 8
test 17, 18
test menu 18
transducer block parameters 29

U

units, engineering 5

V

verification 9

W

warnings 9, 17
warranty 41, 42
wiring 7
WRITE_ALM 11
WRITE_LOCK 11
WRITE_PRI 11

X

XD_SCALE 12

Z

zero calibration 5, 19

Find out more
www.honeywellanalytics.com

Contact Honeywell Analytics:

Americas
Honeywell Analytics
405 Barclay Boulevard
Lincolnshire, IL 60069
USA
Tel: +1 847 955 8200
Toll free: +1 800 538 0363
Fax: +1 847 955 8208
detectgas@honeywell.com

Europe, Middle East, Africa
Life Safety Distribution AG
Wilstrasse 11-U11
CH-8610 Uster
Switzerland
Tel: +41 (0)44 943 4300
Fax: +41 (0)44 943 4398
gasdetection@honeywell.com

Technical Services
ha.global.service@honeywell.com

www.honeywell.com

Asia Pacific
Honeywell Analytics Asia Pacific
#508, Kolon Science Valley (1)
187-10 Guro-Dong, Guro-Gu
Seoul, 152-050,
Korea
Tel: +82 (0)2 2025 0307
Fax: +82 (0)2 2025 0329
analytics.ap@honeywell.com

Please Note:
While every effort has been made to ensure accuracy in this publication, no responsibility can be accepted for errors or omissions.
Data may change, as well as legislation, and you are strongly advised to obtain copies of the most recently issued regulations, standards and guidelines.
This publication is not intended to form the basis of a contract.

Honeywell

Revision 1.0
© 2011 Honeywell Analytics